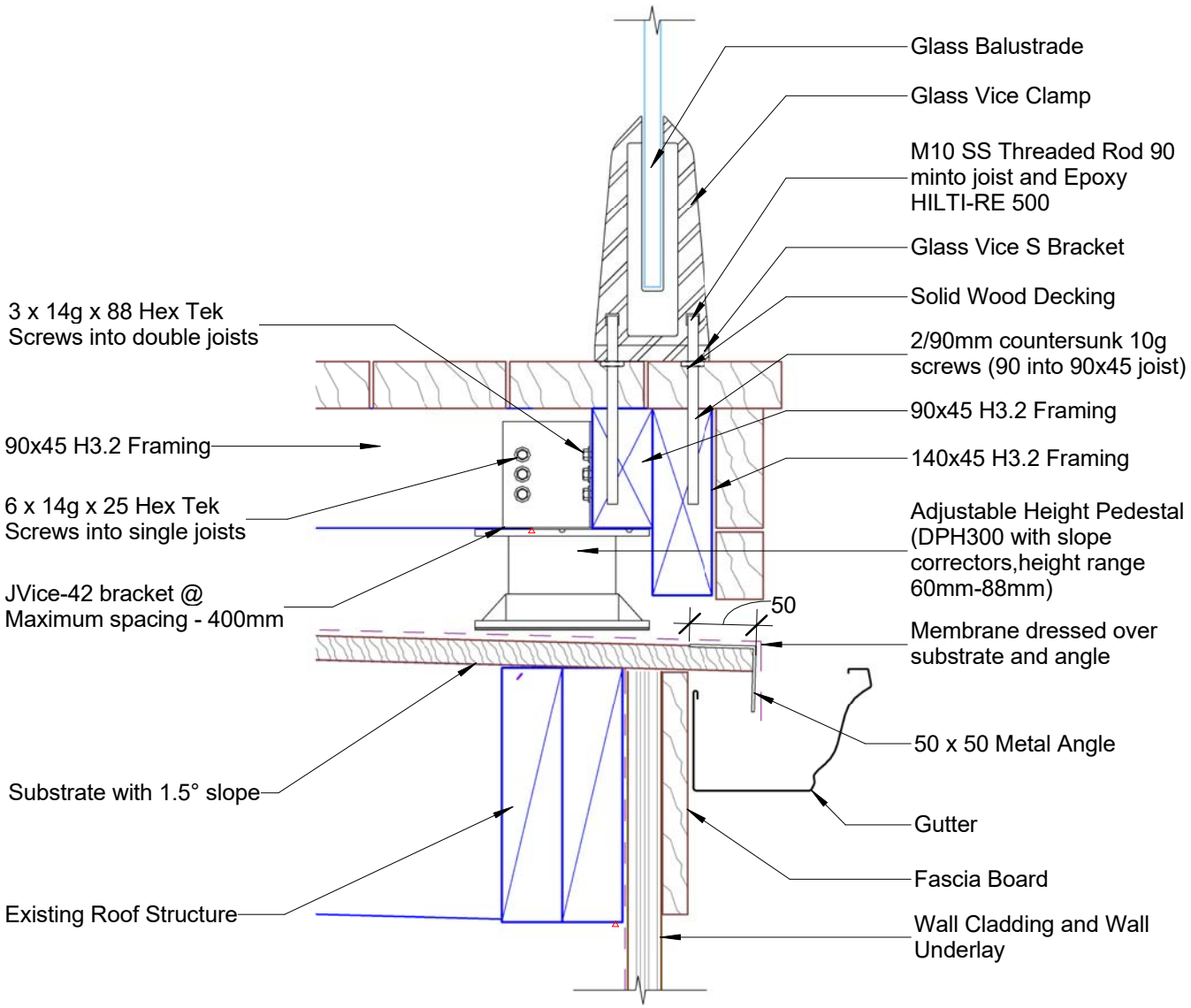

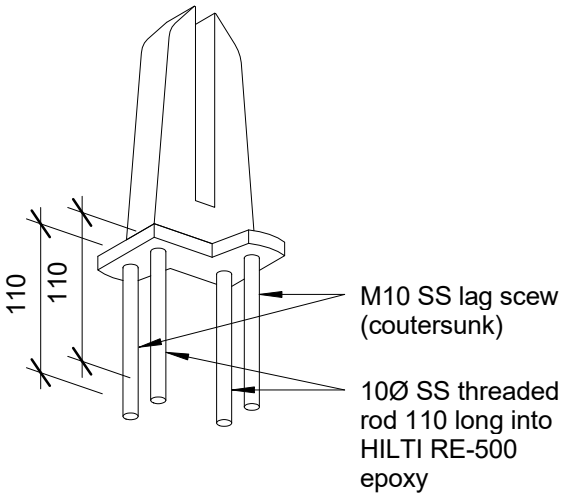

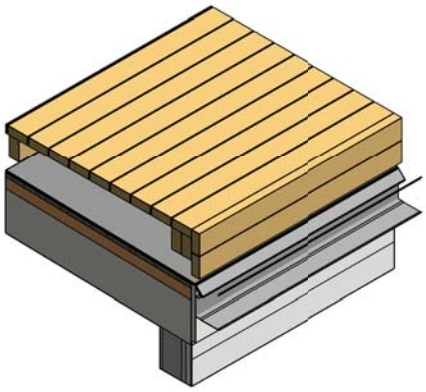

© 2017. The copyright of this document is the property of Glass Vice Limited and shall not be reproduced, copied, loaned or disposed of directly, or indirectly, nor used for any purpose other than that for which it is specifically furnished without prior consent.

glass vice_deck_float_nib.rvt
All dimensions in millimetres

Glass Vice

Deck Overlay for Glass Vice Fittings - 3875

Detail

Date: 03/10/17
Scale: 1 : 5
Version 3

www.glassvice.com
Phone +64 9 414 6565
info@glassvice.com

Quick Code: DKF30